Invertek Drives.com

OPTIDRIVE™ CP²

AC Variable Speed Drive

Powerful Performance

Advanced motor control

0.75kW – 250kW / 1HP – 400HP

200 – 600V Single & 3 Phase Input

Powerful Performance

World leading control for the latest generation of permanent magnet and standard induction motors

Manufacturing Conveyer Systems Plastics Processing Plants Chemical Pumping Machine Tools Rubber Elevators Cranes

World Leading Motor Control

The Optidrive P2 offers the perfect combination of high performance together with ease of use to allow even the most demanding applications to be tackled easily.

Designed for fast installation and commissioning, Optidrive P2 provides the most cost effective solution for industry.

All Optidrive P2 units provide 150% overload for 60 seconds as standard, ensuring each drive is suitable for Heavy Duty applications, whilst the IP55 enclosed versions ensure the drive is tough enough to survive in industrial environments.

Extensive I/O and communications interface capabilities ensure the drive can be integrated quickly and efficiently into a wide variety of control systems with the minimum commissioning time, ensuring rapid start up. Invertek's simple parameter structure, and carefully selected factory parameter settings ensure that commissioning time is kept to a minimum.

Compliant with international standards.
Manufactured in the UK.

150% overload for 60 seconds

IP20
Up to 250kW

IP55
Up to 250kW

IP66
Up to 30kW

Advanced Motor Control

Optidrive P2 has been uniquely developed to allow a wide range of different motor types to be used, with only parameter changes being required. This technology allows the same drive to be used in a wide range of applications, allowing OEMs and end user alike to take advantage of the energy saving provided by using the latest motor technologies.

AC Induction Motors

The majority of AC motors in use today around the world are standard induction motors. These motors are relatively low cost, readily available and provide good performance with long service life. With the ever increasing focus on energy efficiency, motor manufacturers have refined and improved their designs in recent years.

Optidrive P2 has been developed to provide optimum control and maximum efficiency when operating with older motors designs, or newer high efficiency designs.

Operation can be in simple V/F control mode or in High Performance Third Generation Vector Mode, which provides up to 200% torque from zero speed without requiring an encoder.

Permanent Magnet AC Motors

Permanent magnet AC motors provide improved efficiency compared to standard induction motors. Using permanent magnets in the motor construction eliminates the need for any magnetising current, reducing electrical losses. PM motors have been used for many years in high performance applications, however this has always required the use of a feedback device, such as a resolver or encoder. Optidrive P2 has been designed to operate with AC PM motors without requiring any feedback device, allowing them to be used for their energy efficiency benefits without incurring extra cost and complexity in applications which do not require position feedback.

Brushless DC Motors

BLDC motors are similar to AC PM motors, however the design requires a slightly different control method to optimise the performance. Optidrive P2 has the flexibility to control this type of motor, requiring only simple parameter changes. This provides much greater flexibility for OEMs, allowing Optidrive P2 to be used in a variety of applications, with various motor types.

Synchronous Reluctance Motors

Synchronous Reluctance Motors (SynRM), not to be confused with Switched Reluctance Motors, share a similar stator construction to standard induction motors, however the rotor is substantially different, in order to improve the overall efficiency of the motor. SynRM motors are ideally suited to variable torque applications.

Optidrive P2 can control synchronous reluctance motors, allowing the energy saving benefits to be realised.

At a Glance...

High performance, excellent usability and flexible to meet the needs of your application

Safe Torque Off (provided as standard)

Optidrive P2 features a safe torque off function to allow simple integration into machine critical safety circuits.

- Simple machine design reduces component costs, saves panel space and minimises installation time
- Faster shut down and reset procedures reduce system maintenance time
- Better safety standard compared to mechanical solution
- Better motor connection. Single cable with no interruption.

TÜVRheinland Functional Safety Type Approved FS

With

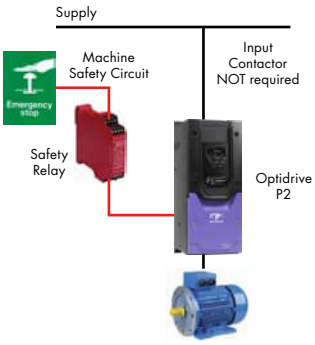

Without

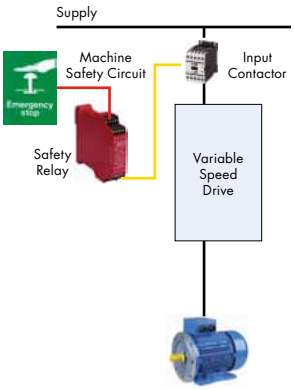

Applications

High performance, accurate motor control for even the most demanding of applications

Mining & Quarrying

- Feed conveyers
- Crushers
- Cranes

Metals & Processing

- Grinding
- Cutting
- Polishing
- Drilling
- Rolling

Rubber & Plastics

- Extruders
- Moulding
- Mixers
- Winding

Food & Beverage

- Conveyers
- Pumps
- Mixers
- Palletisers

Powerful, versatile and easy to use

Cranes

Requirements:

- High starting torque
- Smooth motor operation throughout starting and stopping phases
- Motor holding brake control
- Avoidance of load droop and sag
- Regeneration and braking capability during load lowering

Optidrive P2 provides:

- Dedicated Hoist Mode Operation with motor holding brake control algorithm
- Up to 200% torque from zero speed in vector operation without encoder feedback
- Multiple Preset Speed or variable speed operation
- Built in dynamic braking transistor, requires only an external resistor

Compressors

Requirements:

- Precise regulation of speed to ensure a consistent end product
- High starting torque demand in many applications
- Maximum efficiency under all conditions
- Safe operation to prevent accidents and injuries

Optidrive P2 Provides:

- PM Motor control mode to allows open loop operation with Permanent Magnet motors for maximum efficiency
- Maximum starting torque with standard AC motors
- Better than 0.5% speed holding accuracy in Open Loop Vector Operation
- Dedicated Safe Torque Off input complies with EN62061 SIL Level 2 for safe operation

Winding

Requirements:

- Precise control of motor torque over a broad speed range
- Accurate control of material tension under all conditions
- Open or closed loop control capability, based on tension feedback or winding diameter
- Web break protection in case of material breakage

Optidrive P2 Provides:

- PID Closed Loop Tension Control with feedback from a load cell or dancer arm
- Open Loop Vector control provides optimum control of the output torque level
- Encoder feedback option allows for a very wide speed range, even down to zero speed
- Safe Torque Off input immediately disables the drive in Emergency conditions

Options & Accessories

Installation options, plug-in modules and commissioning tools

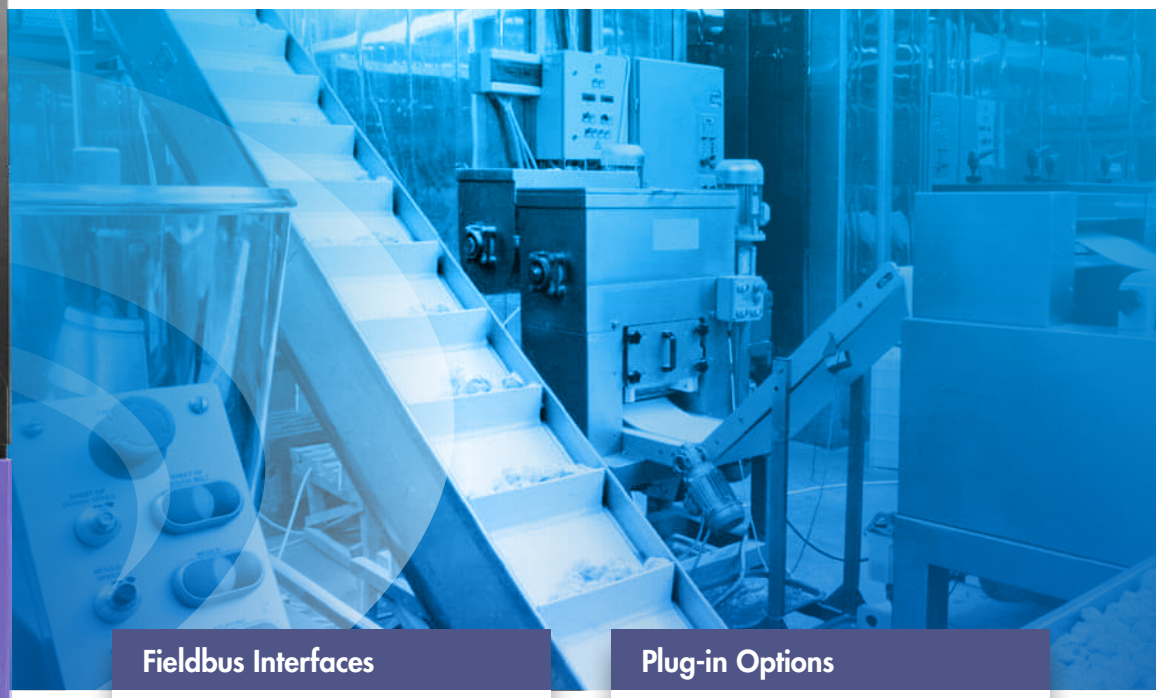

Modbus RTU and CANopen on board as standard

For additional communication interfaces or functionality a range of plug-in modules is available:

Fieldbus Interfaces

Profibus DP
OPT-2-PROFB-IN

DeviceNet
OPT-2-DEVNT-IN

Ethernet IP
OPT-2-ETHNT-IN

Modbus TCP
OPT-2-MODIP-IN

Profinet
OPT-2-PFNET-IN

EtherCat
OPT-2-ETCAT-IN

Plug-in Options

Encoder Feedback

OPT-2-ENCOD-IN (5 Volt)
OPT-2-ENCHT-IN (15 – 30 Volt)

Closed loop encoder feedback, compatible with a wide range of incremental encoders

Extended I/O

OPT-2-EXTIO-IN

- Additional 3 Digital Inputs
- Additional Relay Output

Extended Relay

OPT-2-CASCD-IN

Additional 3 Relay Outputs:

Relay 3 – Drive Healthy Indication
Relay 4 – Drive Fault Indication
Relay 5 – Drive Running Indication

Functions are programmable / adjustable

Installation & Peripheral Options

A range of external EMC Filters, Brake Resistors, Input Chokes and Output Filters are available, to suit all installation requirements

Optistick Smart

NFC

Bluetooth®

Rapid Commissioning Tool

- Allows copying, backup and restore of drive parameters
- Provides Bluetooth interface to a PC running OptiTools Studio or the OptiTools Mobile app on a smartphone
- Onboard NFC (Near Field Communication) for rapid data transfer

OPT-3-STICK-IN

OptiTools Studio

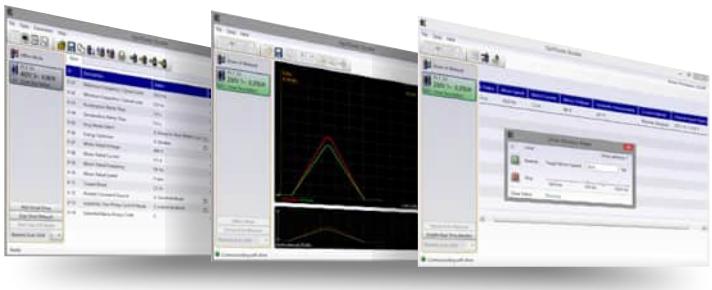

Powerful PC Software

Drive commissioning and parameter backup

- Real-time parameter editing
- Drive network communication
- Parameter upload, download and storage
- Simple PLC function programming
- Real-time scope function and data logging
- Real-time data monitoring

Compatible with:

Windows Vista
Windows 7
Windows 8
Windows 8.1
Windows 10

OPTIDRIVE™ CP²

Replace # in model code with enclosure/display option

	kW	Amps	Frame Size	kW Model Code (Product Family / Generation / Frame Size / Voltage Code / Power Rating Code / Supply Phases / Power Type / EMC Filter / Brake Transistor)	IP20 Cabinet Mount	IP55 TFT Display	Indoor IP66 Non Switched	Indoor IP66 Switched	Outdoor IP66 Non Switched	Outdoor IP66 Switched
200–240V ± 10% 1 Phase Input	0.75	4.3	2	ODP - 2 - 2 2 075 - 1 K F 4 #	2-MN		X-TN	Y-TN	A-MN	B-MN
	1.5	7	2	ODP - 2 - 2 2 150 - 1 K F 4 #	2-MN		X-TN	Y-TN	A-MN	B-MN
	2.2	10.5	2	ODP - 2 - 2 2 220 - 1 K F 4 #	2-MN		X-TN	Y-TN	A-MN	B-MN
200–240V ± 10% 3 Phase Input	0.75	4.3	2	ODP - 2 - 2 2 075 - 3 K F 4 #	2-MN		X-TN	Y-TN	A-MN	B-MN
	1.5	7	2	ODP - 2 - 2 2 150 - 3 K F 4 #	2-MN		X-TN	Y-TN	A-MN	B-MN
	2.2	10.5	2	ODP - 2 - 2 2 220 - 3 K F 4 #	2-MN		X-TN	Y-TN	A-MN	B-MN
	4	18	3	ODP - 2 - 3 2 040 - 3 K F 4 #	2-MN		X-TN	Y-TN	A-MN	B-MN
	5.5	24	3	ODP - 2 - 3 2 055 - 3 K F 4 #	2-MN				A-MN	B-MN
	5.5	24	4	ODP - 2 - 4 2 055 - 3 K F 4 #		N-MN				
	7.5	30	4	ODP - 2 - 4 2 075 - 3 K F 4 #	2-MN	N-MN			A-MN	B-MN
	11	46	4	ODP - 2 - 4 2 110 - 3 K F 4 #	2-MN	N-MN			A-MN	B-MN
	15	60	5	ODP - 2 - 5 2 150 - 3 K F 4 #	2-MN	N-MN				
	18.5	72	5	ODP - 2 - 5 2 185 - 3 K F 4 #	2-MN	N-MN				
	22	90	6	ODP - 2 - 6 2 022 - 3 K F 4 #		N-MN				
	22	90	6A	ODP - 2 - 6 2 022 - 3 K F 4 #	2-MN					
	30	110	6	ODP - 2 - 6 2 030 - 3 K F 4 #		N-MN				
	30	110	6A	ODP - 2 - 6 2 030 - 3 K F 4 #	2-MN					
	37	150	6	ODP - 2 - 6 2 037 - 3 K F 4 #		N-MN				
	37	150	6B	ODP - 2 - 6 2 037 - 3 K F 4 #	2-MN					
	45	180	6	ODP - 2 - 6 2 045 - 3 K F 4 #		N-MN				
	45	180	6B	ODP - 2 - 6 2 045 - 3 K F 4 #	2-MN					
	55	202	7	ODP - 2 - 7 2 055 - 3 K F 4 #		N-MN				
	75	248	7	ODP - 2 - 7 2 075 - 3 K F 4 #		N-MN				
380–480V ± 10% 3 Phase Input	0.75	2.2	2	ODP - 2 - 2 4 075 - 3 K F 4 #	2-MN		X-TN	Y-TN	A-MN	B-MN
	1.5	4.1	2	ODP - 2 - 2 4 150 - 3 K F 4 #	2-MN		X-TN	Y-TN	A-MN	B-MN
	2.2	5.8	2	ODP - 2 - 2 4 220 - 3 K F 4 #	2-MN		X-TN	Y-TN	A-MN	B-MN
	4	9.5	2	ODP - 2 - 2 4 400 - 3 K F 4 #	2-MN		X-TN	Y-TN	A-MN	B-MN
	5.5	14	3	ODP - 2 - 3 4 055 - 3 K F 4 #	2-MN		X-TN	Y-TN	A-MN	B-MN
	7.5	18	3	ODP - 2 - 3 4 075 - 3 K F 4 #	2-MN		X-TN	Y-TN	A-MN	B-MN
	11	24	3	ODP - 2 - 3 4 110 - 3 K F 4 #	2-MN				A-MN	B-MN
	11	24	4	ODP - 2 - 4 4 110 - 3 K F 4 #		N-MN				
	15	30	4	ODP - 2 - 4 4 150 - 3 K F 4 #	2-MN	N-MN			A-MN	B-MN
	18.5	39	4	ODP - 2 - 4 4 185 - 3 K F 4 #	2-MN	N-MN			A-MN	B-MN
	22	46	4	ODP - 2 - 4 4 220 - 3 K F 4 #	2-MN	N-MN			A-MN	B-MN
	30	61	5	ODP - 2 - 5 4 300 - 3 K F 4 #	2-MN	N-MN				
	37	72	5	ODP - 2 - 5 4 370 - 3 K F 4 #	2-MN	N-MN				
	45	90	6	ODP - 2 - 6 4 045 - 3 K F 4 #		N-MN				
	45	90	6A	ODP - 2 - 6 4 045 - 3 K F 4 #	2-MN					
	55	110	6	ODP - 2 - 6 4 055 - 3 K F 4 #		N-MN				
	55	110	6A	ODP - 2 - 6 4 055 - 3 K F 4 #	2-MN					
	75	150	6	ODP - 2 - 6 4 075 - 3 K F 4 #		N-MN				
	75	150	6B	ODP - 2 - 6 4 075 - 3 K F 4 #	2-MN					
	90	180	6	ODP - 2 - 6 4 090 - 3 K F 4 #		N-MN				
	90	180	6B	ODP - 2 - 6 4 090 - 3 K F 4 #	2-MN					
	110	202	6B	ODP - 2 - 6 4 110 - 3 K F 4 #	2-MN					
	110	202	7	ODP - 2 - 7 4 110 - 3 K F 4 #		N-MN				
	132	240	7	ODP - 2 - 7 4 132 - 3 K F 4 #		N-MN				
	160	302	7	ODP - 2 - 7 4 160 - 3 K F 4 #		N-MN				
	200	370	8	ODP - 2 - 8 4 200 - 3 K # 4 #	2-MN	N-MN				
	250	480	8	ODP - 2 - 8 4 250 - 3 K # 4 #	2-MN	N-MN				
480–525V ± 10% 3 Phase Input	132	185	7	ODP - 2 - 7 5 132 - 3 K 0 4 #		N-MN				
	150	205	7	ODP - 2 - 7 5 150 - 3 K 0 4 #		N-MN				
	185	255	7	ODP - 2 - 7 5 185 - 3 K 0 4 #		N-MN				
	200	275	7	ODP - 2 - 7 5 200 - 3 K 0 4 #		N-MN				
500–600V ± 10% 3 Phase Input	0.75	2.1	2	ODP - 2 - 2 6 075 - 3 K 0 4 #	2-MN		X-TN	Y-TN	A-MN	B-MN
	1.5	3.1	2	ODP - 2 - 2 6 150 - 3 K 0 4 #	2-MN		X-TN	Y-TN	A-MN	B-MN
	2.2	4.1	2	ODP - 2 - 2 6 220 - 3 K 0 4 #	2-MN		X-TN	Y-TN	A-MN	B-MN
	4	6.5	2	ODP - 2 - 2 6 400 - 3 K 0 4 #	2-MN		X-TN	Y-TN	A-MN	B-MN
	5.5	9	2	ODP - 2 - 2 6 550 - 3 K 0 4 #	2-MN		X-TN	Y-TN	A-MN	B-MN
	7.5	12	3	ODP - 2 - 3 6 075 - 3 K 0 4 #	2-MN		X-TN	Y-TN	A-MN	B-MN
	11	17	3	ODP - 2 - 3 6 110 - 3 K 0 4 #	2-MN				A-MN	B-MN
	15	22	3	ODP - 2 - 3 6 150 - 3 K 0 4 #	2-MN				A-MN	B-MN
	15	22	4	ODP - 2 - 4 6 150 - 3 K 0 4 #		N-MN				
	18.5	28	4	ODP - 2 - 4 6 185 - 3 K 0 4 #	2-MN	N-MN			A-MN	B-MN
	22	34	4	ODP - 2 - 4 6 220 - 3 K 0 4 #	2-MN	N-MN			A-MN	B-MN
	30	43	4	ODP - 2 - 4 6 300 - 3 K 0 4 #	2-MN	N-MN			A-MN	B-MN
	37	54	5	ODP - 2 - 5 6 370 - 3 K 0 4 #	2-MN	N-MN				
	45	65	5	ODP - 2 - 5 6 450 - 3 K 0 4 #	2-MN	N-MN				
	55	78	6	ODP - 2 - 6 6 055 - 3 K 0 4 #		N-MN				
	75	105	6	ODP - 2 - 6 6 075 - 3 K 0 4 #		N-MN				
	90	130	6	ODP - 2 - 6 6 090 - 3 K 0 4 #		N-MN				
	110	150	6	ODP - 2 - 6 6 110 - 3 K 0 4 #		N-MN				

kW Models: Factory Settings
Motor Rated Frequency: 50Hz
Motor Rated Voltage: 30/400/575V

Model Code Guide

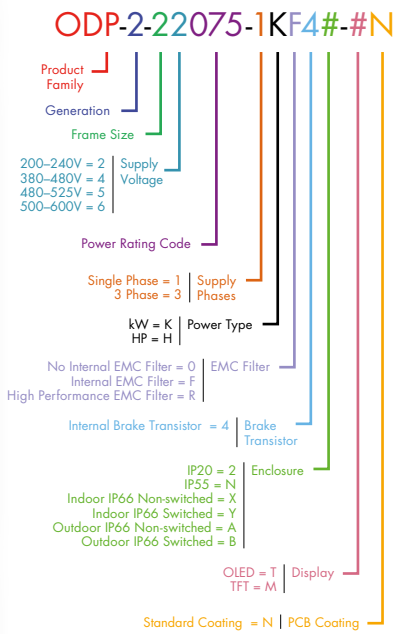

EMC Filter

0	No Internal EMC Filter
F	Internal EMC Filter
R	High Performance EMC Filter

Drive Specification

Input Ratings	Supply Voltage	200 – 240V ± 10% 380 – 480V ± 10% 500 – 600V ± 10%
	Supply Frequency	48 – 62Hz
	Displacement Power Factor	> 0.98
	Phase Imbalance	3% Maximum allowed
	Inrush Current	< rated current
	Power Cycles	120 per hour maximum, evenly spaced
Output Ratings	Output Power	230V 1Ph. Input: 0.75–2.2kW (1–3HP) 230V 3Ph. Input: 0.75–75kW (1–100HP) 400V 3Ph. Input: 0.75–250kW 460V 3Ph. Input: 1–400HP 575V 3Ph. Input: 0.75–110kW (1–150HP)
	Overload Capacity	150% for 60 seconds
	Output Frequency	0 – 500Hz, 0.1Hz resolution
	Acceleration Time	0.01 – 600 seconds
	Deceleration Time	0.01 – 600 seconds
	Typical Efficiency	> 98%
Ambient Conditions	Temperature	Storage: –40 to 60°C Operating: –10 to 50°C
	Altitude	Up to 1000m ASL without derating Up to 2000m maximum UL Approved Up to 4000m maximum (non UL)
	Humidity	95% Max, non condensing
	Vibration	Conforms to IEC 60068-2-6 Sinusoidal Vibration 10 - 57Hz @ 0.075mm Pk 57 - 150Hz @ 1g Pk
Enclosure	Ingress Protection	IP20, IP55, IP66
Programming	Keypad	Built-in keypad as standard Optional remote mountable keypad
	Display	Built-in multi language text display
	PC	OptiTools Studio
Control Specification	Control Method	V/F Voltage Vector Energy Optimsied V/F 3GV Sensorless Vector Speed Control 3GV Sensorless Vector Torque Control Closed Loop (Encoder) Speed Control Closed Loop (Encoder) Torque Control PM Vector Control BLDC Control Synchronous Reluctance
	PWM Frequency	4–32kHz Effective
	Stopping Mode	Ramp to Stop: User Adjustable 0.01–600 secs Coast to Stop
	Braking	Motor Flux Braking Built-in Braking Transistor
	Skip Frequency	Single point, user adjustable
	Setpoint Control	Analog Signal: 0 to 10 Volts 10 to 0 Volts –10 to +10 Volts 0 to 20mA 20 to 0mA 4 to 20mA 20 to 4mA PTC
		Digital: Motorised Potentiometer (Keypad & Terminal) Modbus RTU CANopen

Fieldbus Connectivity	Built-in	CANopen: 125 – 1000kbps
		Modbus RTU: 9.6 - 115.2 kbps selectable 8N1, 8N2, 8E1, 8O1
	Optional	Other: PROFIBUS DP (DPV1) PROFINET IO DeviceNet EtherNet/IP EtherCAT Modbus TCP
I/O Specification	Power Supply	24 Volt DC, 100mA, Short Circuit Protected 10 Volt DC, 10mA for Potentiometer
	Programmable Inputs	5 Total as standard (Optional additional 3) 3 Digital (Optional additional 3) 2 Analog / Digital Selectable 5 Digital With CAN IO Option
	Digital Inputs	Opto - Isolated 8 – 30 Volt DC, internal or external supply Response time < 4ms
	Analog Inputs	Resolution: 12 bits Response time: < 4ms Accuracy: < 1% full scale Parameter adjustable scaling and offset
	PTC Input	Motor PTC / Thermistor Input Trip Level : 3kΩ
	Programmable Outputs	7 Total (Optional additional 3) 2 Analog / Digital 2 Relays (Optional additional 3) 3 With CAN IO Option Module
	Relay Outputs	Maximum Voltage: 250 VAC, 30 VDC Switching Current Capacity: 5A AC , 5A DC
	Analog Outputs	0 to 10 Volt 0 to 20mA 4 to 20mA
Application Features	PID Control	Internal PID Controller Multi Setpoint Select Standby / Sleep Mode Boost Function
	Hoist Mode	Dedicated Hoist Mode Motor Holding Brake Pre-Torque & Control Over Limit Protection
Maintenance & Diagnostics	Fault Memory	Last 4 Trips stored with time stamp
	Data Logging	Logging of data prior to trip for diagnostic purposes: Output Current Drive Temperature DC Bus Voltage Plus more in Optitools
	Maintenance Indicator	Maintenance Indicator with user adjustable maintenance interval Onboard service life monitoring
	Monitoring	Hours Run Meter Resettable & Non Resettable kWh meters Cooling Fan Run Time
Standards Compliance	Low Voltage Directive	2014/35/EU
	EMC Directive	2014/30/EU
	Additional Conformance	UL, cUL, EAC, RCM
	Marine Certification	DNV Type Approval
	Environmental Conditions	Conformal Coated PCBs. Suitable for use in the following environments: IP20: 3C2, 3S2 IP55 & IP66: 3C3, 3S3

Connection Diagram

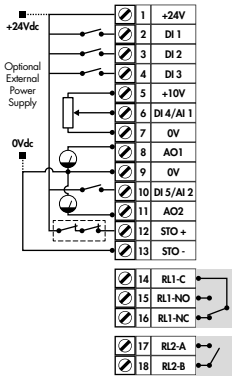

Function	Default Setting
24 Volt DC Output, 100mA max / 24 Volt DC Input	
Digital Input 1	Drive Enable
Digital Input 2	Forward/Reverse Select
Digital Input 3	Preset Speed 1 Select
+10 Volt Power Supply 5mA	
Analog Input 1	Speed Reference 0–10 Volt
0 Volt	
Analog Output 1	Motor Speed
0 Volt	
Analog Input 2	
Analog Output 2	Motor Current
Safe Torque Off Input	
Safe Torque Off Input	
Output Relay 1	Drive Healthy / Fault
Output Relay 2	Drive Running

NOT TO SCALE

	Size	IP20 2	IP20 3	IP20 4	IP20 5	IP20 6A	IP20 6B	IP20 8	IP66 2	IP66 3	IP66 4	IP55 4	IP55 5	IP55 6	IP55 7	IP55 8
mm	Height	221	261	418	486	614	726	974	257	310	360	450	540	865	1280	1334
mm	Width	110	131	172	233	286	330	444	188	211	240	171	235	330	330	444
mm	Depth	185	205	240	260	320	320	423	172	235	271	252	270	332	358	423
kg	Weight	1.8	3.5	9.2	18.1	32	43	124.5	3.5	6.6	9.5	11.5	23	55	89	TBC

OPTIDRIVE™ CP²

Invertek Drives.com

+44 (0)1938 556868

Invertek Drives Ltd is dedicated to the design, manufacture and marketing of electronic variable speed drives. The state of the art UK headquarters houses specialist facilities for research & development, manufacturing and global marketing. The company pledges to implement and operate the ISO 14001 Environmental Management System to enhance environmental performance.

All company operations are accredited to the exacting customer focused ISO 9001:2008 quality standard. The company's products are sold globally in over 80 different countries. Invertek Drives' unique and innovative drives are designed for ease of use and meet with recognised international design standards.

UK Headquarters, Welshpool

Global Drive Solutions

Invertek Drives operate at the heart of automated systems around the world

Crane Control
Demanding application at South African mine

Machine Tool OEM
UK machine tool supplier specifies Optidrive

Film Manufacturing
Optimum tension control in Australia

Food Processing
Precision conveyor control in Spain

Amusement Parks
Reliable control of difficult loads in Spain

Optidrive P2 User Guide

Scan to download or visit the Invertek Drives website

www.invertekdrives.com/variable-frequency-drives/optidrive-p2

INVERTEK DRIVES LIMITED UK Headquarters

Offa's Dyke Business Park
Welshpool, Powys, UK
SY21 8JF

Tel: +44 (0)1938 556868
Fax: +44 (0)1938 556869
Email: sales@invertekdrives.com

© 2022 Invertek Drives Ltd. All rights reserved. 85-ODP2B-IN V4.01